NORTON SWIVEL CHAIR

NRT-560

- 32w x 34d x 32h
- Shown With Kingston Warm White (Fabric No. 1430) fabric and Fruitwood (Finish No. 27) legs.
- Default Base Finish is Fruitwood. Add Finish to Cart below to select a different Option.
- Made by hand in the USA using kiln-dried solid Maple with sinuous springs.
- Cushion Fill: Urethane Foam 75% Polyester Fiber 25%
- 50% Deposit Required. All Sales are Final

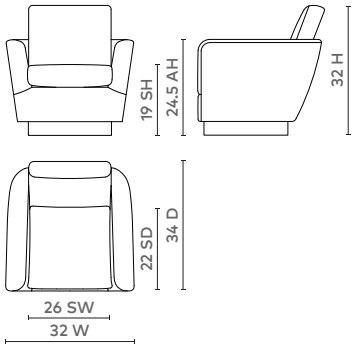

BUNGALOW5

201.405.1800 | BUNGALOW5.COM